J. BARNSLEY
Cranes Limited

Pneumatic Hoists
Chain & Trolley

TCR-250-AT2S
TCR-500-2 AT2S
TCR-500-AT2S
TCR-1000/2-AT2S
TCR-1000-AT2S
TCR-2000/2-AT2S
TCR-3000-AT3S
TCR-6000/2-AT6S
TCR-9000/3-AT10S
TCR12000/4-AT10S
TCR15000/5-AT15S
TCS-980-AT2S
TNC-10TW-AT10S
TNC-15TW/3-AT1-5S
TNC-20TW/4-AT2-5S
TNC-25TW-AT25-2S
TNC-25TW-AT2-5S
TNC-35TW-AT37.5-2S
TNC-50TW/4-AT50-2S

www.jbarnsleycranes.com | sales@jbarnsleycranes.com

PNEUMATIC CHAIN HOIST & TROLLEY

J. BARNSLEY Cranes Limited

STANDARD FEATURES

- Toku rotary vane motor
- Robust epicycle gearbox
- Failsafe automatic internal disc brake
- Choice of pendant controls or control stations
- Upper & lower limit switches
- Cast steel housing
- Internal silencing down to 80 dB(A)
- Alloy safety swivel hooks with safety catch
- Load chain of European manufacture to EN818-7
- Automatic, adjustable load limiter
- Trolley to suit various flange profiles
- Anti-tilt & anti-drop plates
- High efficiency motor gearbox
- Heavy duty sealed wheel bearings
- Wheel profile to suit parallel or tapered flanges

AVAILABLE OPTIONS

- Marine specification
- Special paint systems
- Collision bumpers
- ATEX specification ZONE 1 & 2
- Chain collectors (PVC, galvanised or stainless steel)
- Articulated trolley
- Low headroom units
- Rack & pinion drive
- Travel limits
- Air service units
- Festoon systems
- Radio control remote
- Optional travel speeds
- Beam brake

Image for illustration purposes only

HOIST MODEL	TCR-250-AT2S
WLL	250 kg
CHAIN FALLS	1
LIFTING SPEED FULL LOAD	9.3 m/min
LIFTING SPEED WITHOUT LOAD	19.0 m/min
AIR CONSUMPTION (L/SEC)	13
WORKING PRESSURE	6 Bar
AIR CONNECTION	1/2" BSP
MINIMUM HOSE DIA.	1/2"
WEIGHT 3M HOL & TROLLEY	32 kg
ADDITIONAL METRE HOL	0.35 kg
TROLLEY MODEL	AT2S
G.A. DRAWING	1500-22
FLANGE RANGE 1	55-140
FLANGE RANGE 2	140-220
FLANGE RANGE 3	220-300
STANDARD TROLLEY TEMP RANGE	-10 to +50°C
OPTIONAL TROLLEY TEMP RANGE	-20 to +70°C
STANDARD TRAVEL SPEED	9 m/min
ATEX TRAVEL SPEED	6 m/min
OPTIONAL TRAVEL SPEED	14 m/min
WHEEL MATERIAL	Steel
ATEX WHEEL MATERIAL	Bronze
MINIMUM BEND RADIUS (M)	1.5
NUMBER OF WHEELS	4
DRIVEN WHEELS	2
MAX AIR CONSUMPTION	25 l/sec
HOSE ID TROLLEY	1/2"

AT_S = STANDARD AT_ATX = ATEX

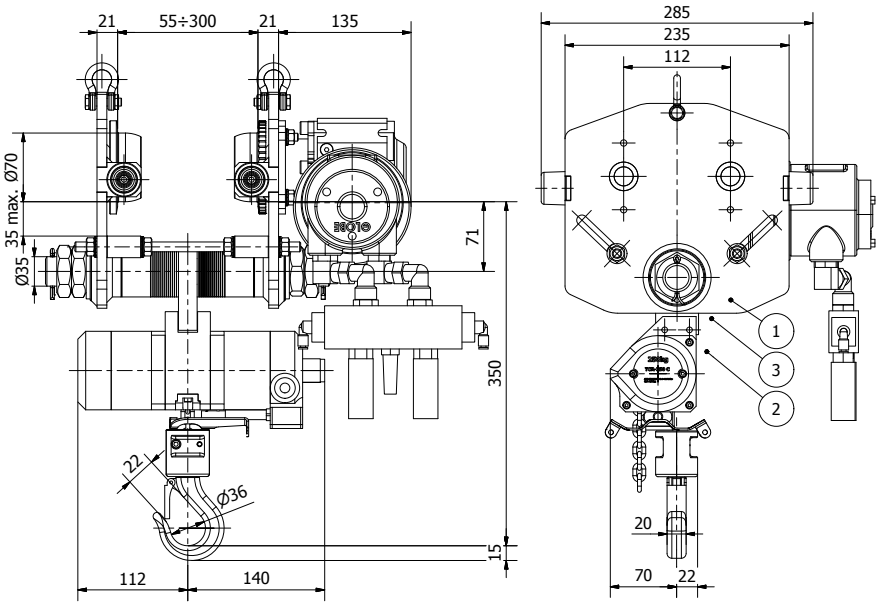

All measurements are in mm
Information subject to change without notice

TCR-250-AT2S

PNEUMATIC CHAIN HOIST & TROLLEY

J. BARNSLEY Cranes Limited

STANDARD FEATURES

- Toku rotary vane motor
- Robust epicycle gearbox
- Failsafe automatic internal disc brake
- Choice of pendant controls or control stations
- Upper & lower limit switches
- Cast steel housing
- Internal silencing down to 80 dB(A)
- Alloy safety swivel hooks with safety catch
- Load chain of European manufacture to EN818-7
- Automatic, adjustable load limiter
- Trolley to suit various flange profiles
- Anti-tilt & anti-drop plates
- High efficiency motor gearbox
- Heavy duty sealed wheel bearings
- Wheel profile to suit parallel or tapered flanges

AVAILABLE OPTIONS

- Marine specification
- Special paint systems
- Collision bumpers
- ATEX specification ZONE 1 & 2
- Chain collectors (PVC, galvanised or stainless steel)
- Articulated trolley
- Low headroom units
- Rack & pinion drive
- Travel limits
- Air service units
- Festoon systems
- Radio control remote
- Optional travel speeds
- Beam brake

Image for illustration purposes only

HOIST MODEL	TCR-500/2-AT2S
WLL	500 kg
CHAIN FALLS	2
LIFTING SPEED FULL LOAD	4.6 m/min
LIFTING SPEED WITHOUT LOAD	9.5 m/min
AIR CONSUMPTION (L/SEC)	13
WORKING PRESSURE	6 Bar
AIR CONNECTION	1/2" BSP
MINIMUM HOSE DIA.	1/2"
WEIGHT 3M HOL & TROLLEY	34 kg
ADDITIONAL METRE HOL	0.7 kg
TROLLEY MODEL	AT2S
G.A. DRAWING	1500-35
FLANGE RANGE 1	55-140
FLANGE RANGE 2	140-220
FLANGE RANGE 3	220-300
STANDARD TROLLEY TEMP RANGE	-10 to +50°C
OPTIONAL TROLLEY TEMP RANGE	-20 to +70°C
STANDARD TRAVEL SPEED	9 m/min
ATEX TRAVEL SPEED	6 m/min
OPTIONAL TRAVEL SPEED	14 m/min
WHEEL MATERIAL	Steel
ATEX WHEEL MATERIAL	Bronze
MINIMUM BEND RADIUS (M)	1.5
NUMBER OF WHEELS	4
DRIVEN WHEELS	2
MAX AIR CONSUMPTION	25 l/sec
HOSE ID TROLLEY	1/2"

AT_S = STANDARD AT_ATX = ATEX

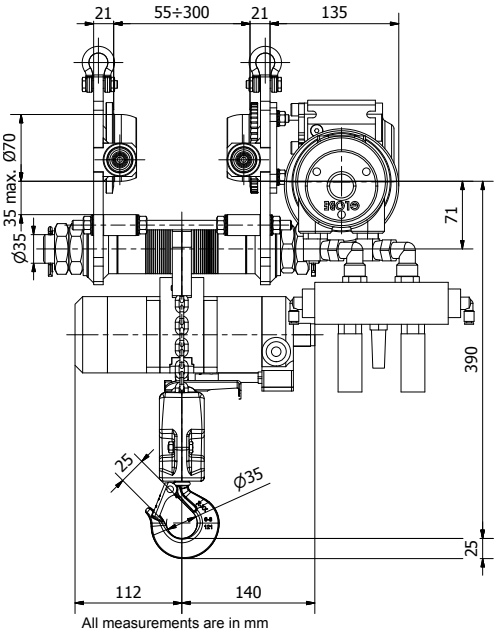

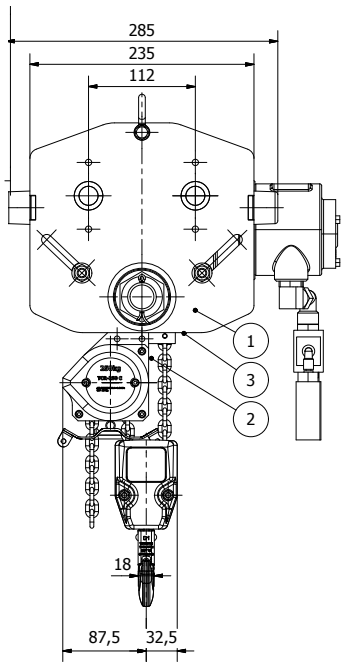

All measurements are in mm
Information subject to change without notice

TCR-500/2-AT2S

PNEUMATIC CHAIN HOIST & TROLLEY

J. BARNSLEY Cranes Limited

STANDARD FEATURES

- Toku rotary vane motor
- Robust epicycle gearbox
- Failsafe automatic internal disc brake
- Choice of pendant controls or control stations
- Upper & lower limit switches
- Cast steel housing
- Internal silencing down to 80 dB(A)
- Alloy safety swivel hooks with safety catch
- Load chain of European manufacture to EN818-7
- Automatic, adjustable load limiter
- Trolley to suit various flange profiles
- Anti-tilt & anti-drop plates
- High efficiency motor gearbox
- Heavy duty sealed wheel bearings
- Wheel profile to suit parallel or tapered flanges

AVAILABLE OPTIONS

- Marine specification
- Special paint systems
- Collision bumpers
- ATEX specification ZONE 1 & 2
- Chain collectors (PVC, galvanised or stainless steel)
- Articulated trolley
- Low headroom units
- Rack & pinion drive
- Travel limits
- Air service units
- Festoon systems
- Radio control remote
- Optional travel speeds
- Beam brake

Image for illustration purposes only

HOIST MODEL	TCR-500-AT2S
WLL	250 kg / 500 kg
CHAIN FALLS	1
LIFTING SPEED FULL LOAD	12 / 10.5 m/min
LIFTING SPEED WITHOUT LOAD	16.0 m/min
AIR CONSUMPTION (L/SEC)	25
WORKING PRESSURE	6 bar
AIR CONNECTION	1/2" BSP
MINIMUM HOSE DIA.	1/2"
WEIGHT 3M HOL & TROLLEY	59 kg
ADDITIONAL METRE HOL	0.8 kg
TROLLEY MODEL	AT2S
G.A. DRAWING	1500-26
FLANGE RANGE 1	55-140
FLANGE RANGE 2	140-220
FLANGE RANGE 3	220-300
STANDARD TROLLEY TEMP RANGE	-10 to +50°C
OPTIONAL TROLLEY TEMP RANGE	-20 to +70°C
STANDARD TRAVEL SPEED	9 m/min
ATEX TRAVEL SPEED	6 m/min
OPTIONAL TRAVEL SPEED	14 m/min
WHEEL MATERIAL	Steel
ATEX WHEEL MATERIAL	Bronze
MINIMUM BEND RADIUS (M)	1.5
NUMBER OF WHEELS	4
DRIVEN WHEELS	2
MAX AIR CONSUMPTION	25 l/sec
HOSE ID TROLLEY	1/2"

AT_S = STANDARD AT_ATX = ATEX

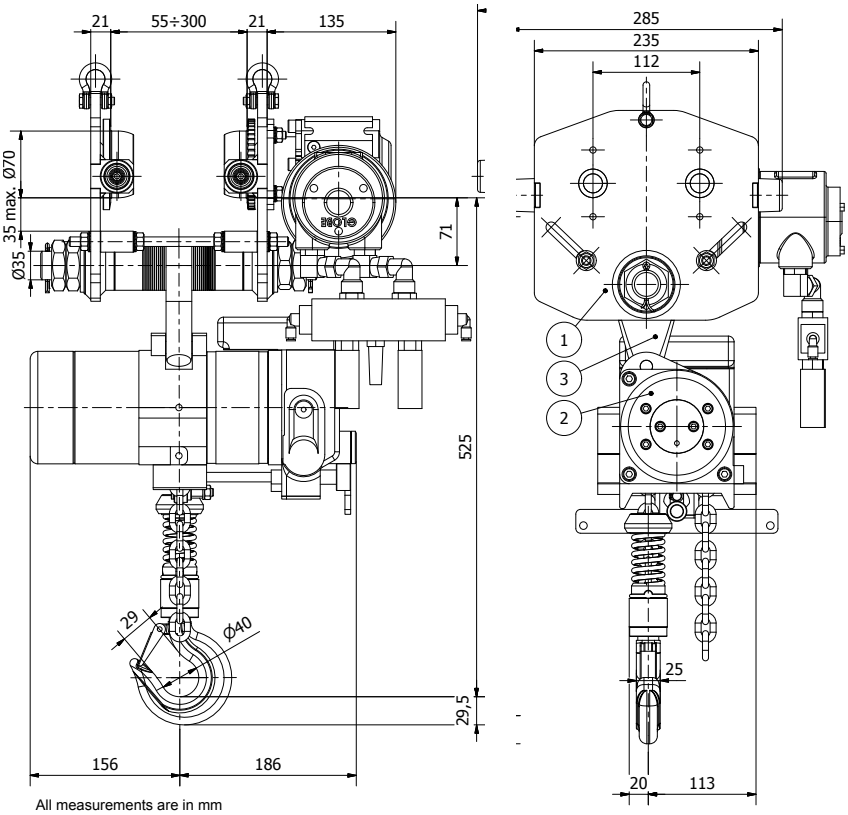

All measurements are in mm
Information subject to change without notice

TCR-500-AT2S

PNEUMATIC CHAIN HOIST & TROLLEY

J. BARNSLEY Cranes Limited

STANDARD FEATURES

- Toku rotary vane motor
- Robust epicycle gearbox
- Failsafe automatic internal disc brake
- Choice of pendant controls or control stations
- Upper & lower limit switches
- Cast steel housing
- Internal silencing down to 80 dB(A)
- Alloy safety swivel hooks with safety catch
- Load chain of European manufacture to EN818-7
- Automatic, adjustable load limiter
- Trolley to suit various flange profiles
- Anti-tilt & anti-drop plates
- High efficiency motor gearbox
- Heavy duty sealed wheel bearings
- Wheel profile to suit parallel or tapered flanges

AVAILABLE OPTIONS

- Marine specification
- Special paint systems
- Collision bumpers
- ATEX specification ZONE 1 & 2
- Chain collectors (PVC, galvanised or stainless steel)
- Articulated trolley
- Low headroom units
- Rack & pinion drive
- Travel limits
- Air service units
- Festoon systems
- Radio control remote
- Optional travel speeds
- Beam brake

Image for illustration purposes only

HOIST MODEL	TCR-1000/2-AT2S
WLL	1000 kg
CHAIN FALLS	2
LIFTING SPEED FULL LOAD	5.3 m/min
LIFTING SPEED WITHOUT LOAD	9.5 m/min
AIR CONSUMPTION (L/SEC)	25
WORKING PRESSURE	6 bar
AIR CONNECTION	1/2" BSP
MINIMUM HOSE DIA.	1/2"
WEIGHT 3M HOL & TROLLEY	62 kg
ADDITIONAL METRE HOL	1.6 kg
TROLLEY MODEL	AT2S
G.A. DRAWING	1500-27
FLANGE RANGE 1	55-140
FLANGE RANGE 2	140-220
FLANGE RANGE 3	220-300
STANDARD TROLLEY TEMP RANGE	-10 to +50°C
OPTIONAL TROLLEY TEMP RANGE	-20 to +70°C
STANDARD TRAVEL SPEED	9 m/min
ATEX TRAVEL SPEED	6 m/min
OPTIONAL TRAVEL SPEED	14 m/min
WHEEL MATERIAL	Steel
ATEX WHEEL MATERIAL	Bronze
MINIMUM BEND RADIUS (M)	1.5
NUMBER OF WHEELS	4
DRIVEN WHEELS	2
MAX AIR CONSUMPTION	25 l/sec
HOSE ID TROLLEY	1/2"

AT_S = STANDARD AT_ATX = ATEX

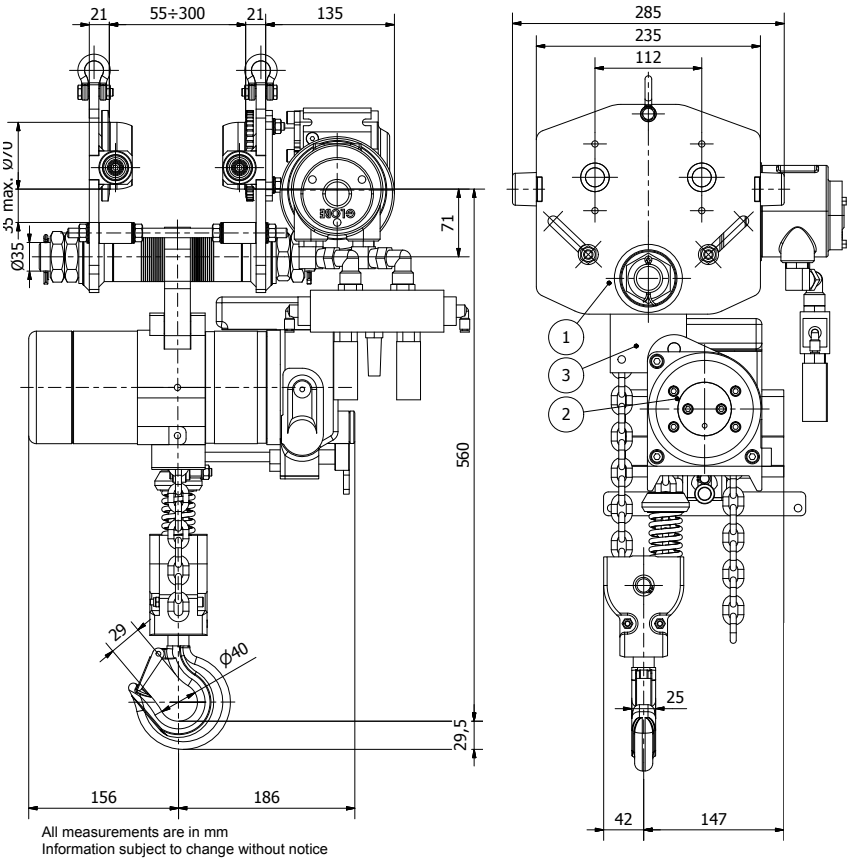

All measurements are in mm
Information subject to change without notice

TCR-1000/2-AT2S

PNEUMATIC CHAIN HOIST & TROLLEY

J. BARNSLEY Cranes Limited

STANDARD FEATURES

- Toku rotary vane motor
- Robust epicycle gearbox
- Failsafe automatic internal disc brake
- Choice of pendant controls or control stations
- Upper & lower limit switches
- Cast steel housing
- Internal silencing down to 80 dB(A)
- Alloy safety swivel hooks with safety catch
- Load chain of European manufacture to EN818-7
- Automatic, adjustable load limiter
- Trolley to suit various flange profiles
- Anti-tilt & anti-drop plates
- High efficiency motor gearbox
- Heavy duty sealed wheel bearings
- Wheel profile to suit parallel or tapered flanges

AVAILABLE OPTIONS

- Marine specification
- Special paint systems
- Collision bumpers
- ATEX specification ZONE 1 & 2
- Chain collectors (PVC, galvanised or stainless steel)
- Articulated trolley
- Low headroom units
- Rack & pinion drive
- Travel limits
- Air service units
- Festoon systems
- Radio control remote
- Optional travel speeds
- Beam brake

Image for illustration purposes only

HOIST MODEL	TCR-1000-AT2S
WLL	1000 kg
CHAIN FALLS	1
LIFTING SPEED FULL LOAD	6.0 m/min
LIFTING SPEED WITHOUT LOAD	11.3 m/min
AIR CONSUMPTION (L/SEC)	25
WORKING PRESSURE	6 bar
AIR CONNECTION	1/2" BSP
MINIMUM HOSE DIA.	1/2"
WEIGHT 3M HOL & TROLLEY	61 kg
ADDITIONAL METRE HOL	1.1 kg
TROLLEY MODEL	AT2S
G.A. DRAWING	1500-28
FLANGE RANGE 1	55-140
FLANGE RANGE 2	140-220
FLANGE RANGE 3	220-300
STANDARD TROLLEY TEMP RANGE	-10 to +50°C
OPTIONAL TROLLEY TEMP RANGE	-20 to +70°C
STANDARD TRAVEL SPEED	9 m/min
ATEX TRAVEL SPEED	6 m/min
OPTIONAL TRAVEL SPEED	14 m/min
WHEEL MATERIAL	Steel
ATEX WHEEL MATERIAL	Bronze
MINIMUM BEND RADIUS (M)	1.5
NUMBER OF WHEELS	4
DRIVEN WHEELS	2
MAX AIR CONSUMPTION	25 l/sec
HOSE ID TROLLEY	1/2"

AT_S = STANDARD AT_ATX = ATEX

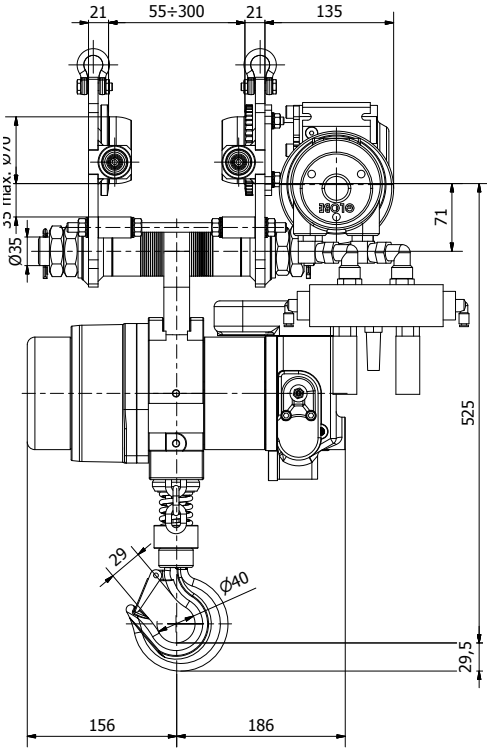

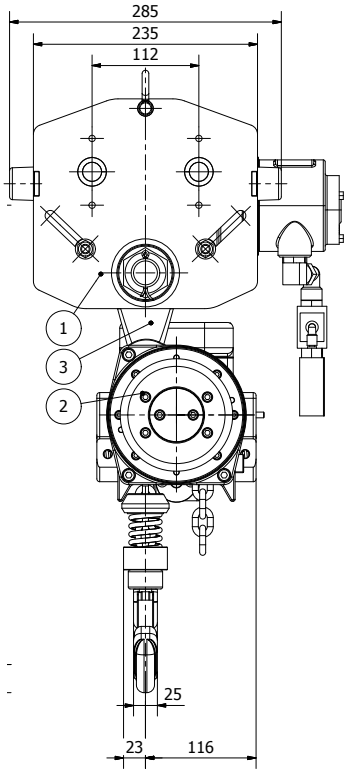

All measurements are in mm
Information subject to change without notice

TCR-1000-AT2S

PNEUMATIC CHAIN HOIST & TROLLEY

J. BARNSLEY Cranes Limited

STANDARD FEATURES

- Toku rotary vane motor
- Robust epicycle gearbox
- Failsafe automatic internal disc brake
- Choice of pendant controls or control stations
- Upper & lower limit switches
- Cast steel housing
- Internal silencing down to 80 dB(A)
- Alloy safety swivel hooks with safety catch
- Load chain of European manufacture to EN818-7
- Automatic, adjustable load limiter
- Trolley to suit various flange profiles
- Anti-tilt & anti-drop plates
- High efficiency motor gearbox
- Heavy duty sealed wheel bearings
- Wheel profile to suit parallel or tapered flanges

AVAILABLE OPTIONS

- Marine specification
- Special paint systems
- Collision bumpers
- ATEX specification ZONE 1 & 2
- Chain collectors (PVC, galvanised or stainless steel)
- Articulated trolley
- Low headroom units
- Rack & pinion drive
- Travel limits
- Air service units
- Festoon systems
- Radio control remote
- Optional travel speeds
- Beam brake

Image for illustration purposes only

HOIST MODEL	TCR-2000/2-AT2S
WLL	2000 kg
CHAIN FALLS	2
LIFTING SPEED FULL LOAD	3.0 m/min
LIFTING SPEED WITHOUT LOAD	5.7 m/min
AIR CONSUMPTION (L/SEC)	25
WORKING PRESSURE	6 bar
AIR CONNECTION	1/2" BSP
MINIMUM HOSE DIA.	1/2"
WEIGHT 3M HOL & TROLLEY	67 kg
ADDITIONAL METRE HOL	2.2 kg
TROLLEY MODEL	AT2S
G.A. DRAWING	1500-00
FLANGE RANGE 1	55-140
FLANGE RANGE 2	140-220
FLANGE RANGE 3	220-300
STANDARD TROLLEY TEMP RANGE	-10 to +50°C
OPTIONAL TROLLEY TEMP RANGE	-20 to +70°C
STANDARD TRAVEL SPEED	9 m/min
ATEX TRAVEL SPEED	6 m/min
OPTIONAL TRAVEL SPEED	14 m/min
WHEEL MATERIAL	Steel
ATEX WHEEL MATERIAL	Bronze
MINIMUM BEND RADIUS (M)	1.5
NUMBER OF WHEELS	4
DRIVEN WHEELS	2
MAX AIR CONSUMPTION	25 l/sec
HOSE ID TROLLEY	1/2"

AT_S = STANDARD AT_ATX = ATEX

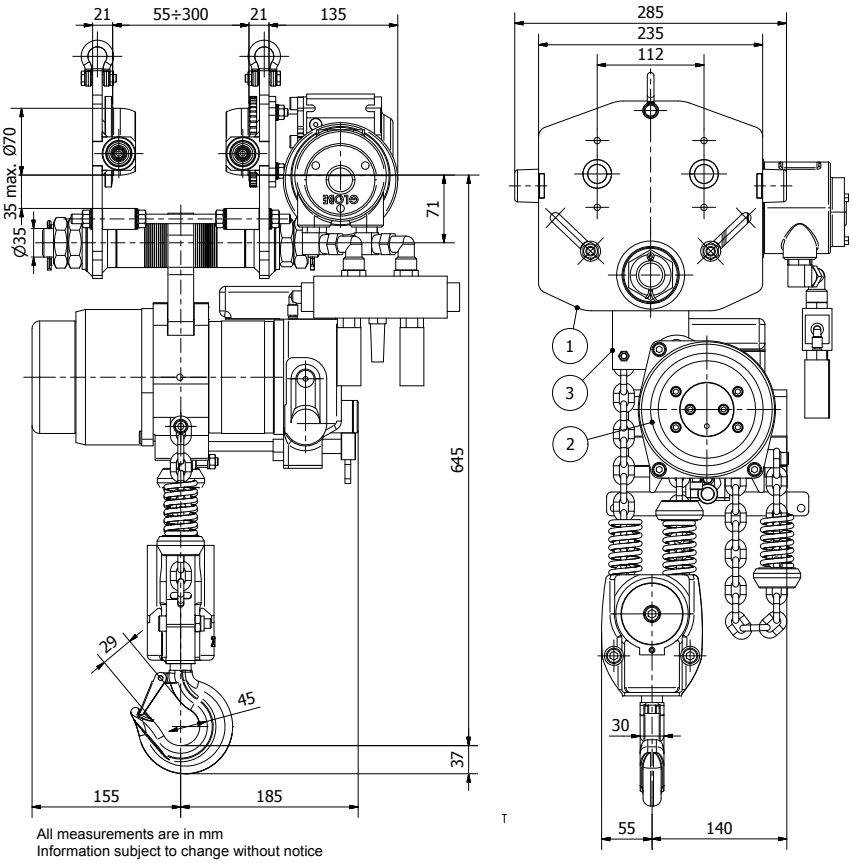

All measurements are in mm
Information subject to change without notice

TCR-2000/2-AT2S

PNEUMATIC CHAIN HOIST & TROLLEY

J. BARNSLEY Cranes Limited

STANDARD FEATURES

- Toku rotary vane motor
- Robust epicycle gearbox
- Failsafe automatic internal disc brake
- Choice of pendant controls or control stations
- Upper & lower limit switches
- Cast steel housing
- Internal silencing down to 80 dB(A)
- Alloy safety swivel hooks with safety catch
- Load chain of European manufacture to EN818-7
- Automatic, adjustable load limiter
- Trolley to suit various flange profiles
- Anti-tilt & anti-drop plates
- High efficiency motor gearbox
- Heavy duty sealed wheel bearings
- Wheel profile to suit parallel or tapered flanges

AVAILABLE OPTIONS

- Marine specification
- Special paint systems
- Collision bumpers
- ATEX specification ZONE 1 & 2
- Chain collectors (PVC, galvanised or stainless steel)
- Articulated trolley
- Low headroom units
- Rack & pinion drive
- Travel limits
- Air service units
- Festoon systems
- Radio control remote
- Optional travel speeds
- Beam brake

Image for illustration purposes only

HOIST MODEL	TCR-3000-AT3S
WLL	3000 kg
CHAIN FALLS	1
LIFTING SPEED FULL LOAD	2.8 m/min
LIFTING SPEED WITHOUT LOAD	5.7 m/min
AIR CONSUMPTION (L/SEC)	33
WORKING PRESSURE	6 Bar
AIR CONNECTION	3/4" BSP
MINIMUM HOSE DIA.	3/4"
WEIGHT 3M HOL & TROLLEY	110 kg
ADDITIONAL METRE HOL	2.7 kg
TROLLEY MODEL	AT3S
G.A. DRAWING	1501-00
FLANGE RANGE 1	80-160
RANGE 2	160-230
RANGE 3	230-300
STANDARD TROLLEY TEMP RANGE	-10 to +50°C
OPTIONAL TROLLEY TEMP RANGE	-20 to +70°C
TRAVEL SPEED (M/MIN)	6*
WHEEL MATERIAL	Steel
ATEX WHEEL MATERIAL	Bronze
MINIMUM BEND RADIUS (M)	2.5
NUMBER OF WHEELS	4
DRIVEN WHEELS	2
MAX AIR CONSUMPTION	25 l/sec
HOSE ID TROLLEY	3/4"

AT_S = STANDARD AT_ATX = ATEX
*Optional Travel Speed of 14 m/min

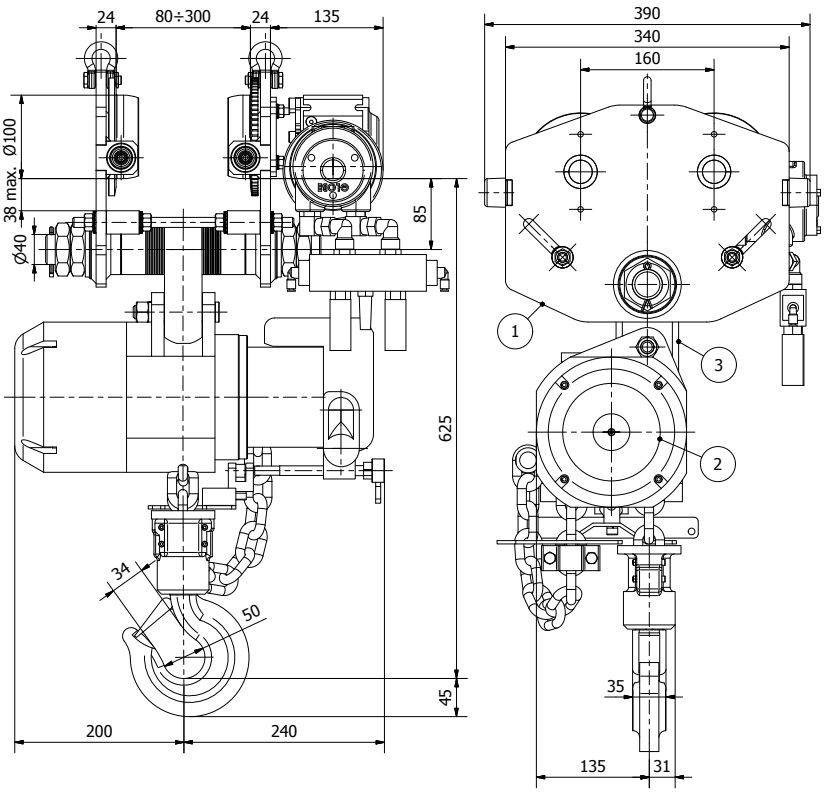

All measurements are in mm
Information subject to change without notice

TCR-3000-AT3S

PNEUMATIC CHAIN HOIST & TROLLEY

J. BARNSLEY Cranes Limited

STANDARD FEATURES

- Toku rotary vane motor
- Robust epicycle gearbox
- Failsafe automatic internal disc brake
- Choice of pendant controls or control stations
- Upper & lower limit switches
- Cast steel housing
- Internal silencing down to 80 dB(A)
- Alloy safety swivel hooks with safety catch
- Load chain of European manufacture to EN818-7
- Automatic, adjustable load limiter
- Trolley to suit various flange profiles
- Anti-tilt & anti-drop plates
- High efficiency motor gearbox
- Heavy duty sealed wheel bearings
- Wheel profile to suit parallel or tapered flanges

AVAILABLE OPTIONS

- Marine specification
- Special paint systems
- Collision bumpers
- ATEX specification ZONE 1 & 2
- Chain collectors (PVC, galvanised or stainless steel)
- Articulated trolley
- Low headroom units
- Rack & pinion drive
- Travel limits
- Air service units
- Festoon systems
- Radio control remote
- Optional travel speeds
- Beam brake

Image for illustration purposes only

HOIST MODEL	TCR-6000/2-AT6S
WLL	6000 kg
CHAIN FALLS	2
LIFTING SPEED FULL LOAD	1.4 m/min
LIFTING SPEED WITHOUT LOAD	2.9 m/min
AIR CONSUMPTION (L/SEC)	33
WORKING PRESSURE	6 Bar
AIR CONNECTION	3/4" BSP
MINIMUM HOSE DIA.	3/4"
WEIGHT 3M HOL & TROLLEY	153 kg
ADDITIONAL METRE HOL	5.4 kg
TROLLEY MODEL	AT6S
G.A. DRAWING	1502-00
FLANGE RANGE 1	90-160
RANGE 2	160-230
RANGE 3	230-300
STANDARD TROLLEY TEMP RANGE	-10 to +50°C
OPTIONAL TROLLEY TEMP RANGE	-20 to +70°C
TRAVEL SPEED (M/MIN)	6*
WHEEL MATERIAL	Steel
ATEX WHEEL MATERIAL	Bronze
MINIMUM BEND RADIUS (M)	2.5
NUMBER OF WHEELS	4
DRIVEN WHEELS	2
MAX AIR CONSUMPTION	25 l/sec
HOSE ID TROLLEY	3/4"

AT_S = STANDARD AT_ATX = ATEX
*Optional Travel Speed of 14 m/min

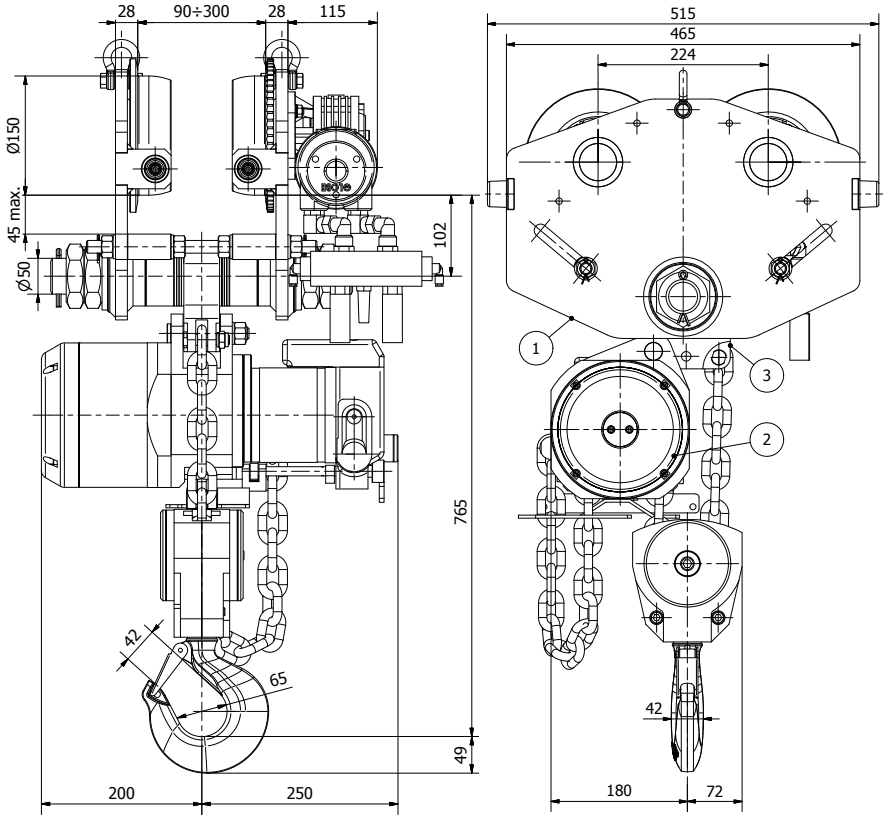

All measurements are in mm
Information subject to change without notice

TCR-6000/2-AT6S

PNEUMATIC CHAIN HOIST & TROLLEY

J. BARNSLEY Cranes Limited

STANDARD FEATURES

- Toku rotary vane motor
- Robust epicycle gearbox
- Failsafe automatic internal disc brake
- Choice of pendant controls or control stations
- Upper & lower limit switches
- Cast steel housing
- Internal silencing down to 80 dB(A)
- Alloy safety swivel hooks with safety catch
- Load chain of European manufacture to EN818-7
- Automatic, adjustable load limiter
- Trolley to suit various flange profiles
- Anti-tilt & anti-drop plates
- High efficiency motor gearbox
- Heavy duty sealed wheel bearings
- Wheel profile to suit parallel or tapered flanges

AVAILABLE OPTIONS

- Marine specification
- Special paint systems
- Collision bumpers
- ATEX specification ZONE 1 & 2
- Chain collectors (PVC, galvanised or stainless steel)
- Articulated trolley
- Low headroom units
- Rack & pinion drive
- Travel limits
- Air service units
- Festoon systems
- Radio control remote
- Optional travel speeds
- Beam brake

Image for illustration purposes only

HOIST MODEL	TCR-9000/3-AT10S
WLL	9000 kg
CHAIN FALLS	3
LIFTING SPEED FULL LOAD	0.9 m/min
LIFTING SPEED WITHOUT LOAD	1.9 m/min
AIR CONSUMPTION (L/SEC)	33
WORKING PRESSURE	6 bar
AIR CONNECTION	3/4" BSP
MINIMUM HOSE DIA.	3/4"
WEIGHT 3M HOL & TROLLEY	290 kg
ADDITIONAL METRE HOL	8.1 kg
TROLLEY MODEL	AT10S
G.A. DRAWING	1503-22
FLANGE RANGE 1	110-180
RANGE 2	180-240
RANGE 3	240-300
STANDARD TROLLEY TEMP RANGE	-10 to +50°C
OPTIONAL TROLLEY TEMP RANGE	-20 to +70°C
TRAVEL SPEED (M/MIN)	8
WHEEL MATERIAL	Steel
ATEX WHEEL MATERIAL	Bronze
MINIMUM BEND RADIUS (M)	2.5
NUMBER OF WHEELS	4
DRIVEN WHEELS	2
MAX AIR CONSUMPTION	40 l/sec
HOSE ID TROLLEY	3/4"

AT_S = STANDARD AT_ATX = ATEX

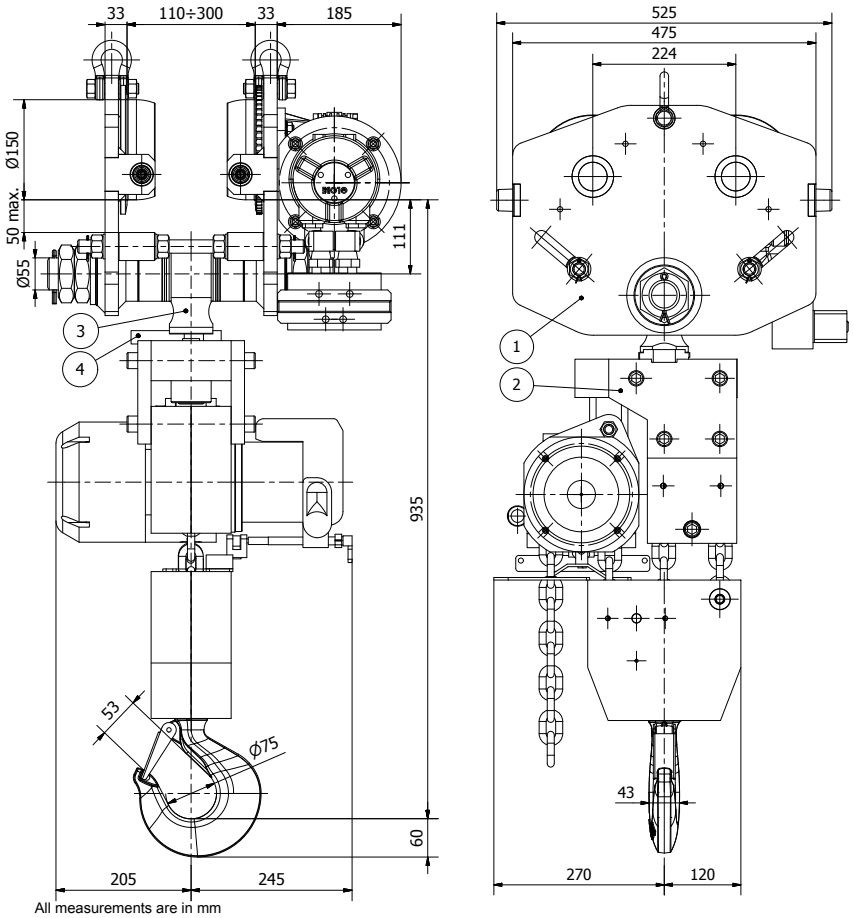

All measurements are in mm
Information subject to change without notice

TCR-9000/3-AT6S

PNEUMATIC CHAIN HOIST & TROLLEY

J. BARNSLEY Cranes Limited

STANDARD FEATURES

- Toku rotary vane motor
- Robust epicycle gearbox
- Failsafe automatic internal disc brake
- Choice of pendant controls or control stations
- Upper & lower limit switches
- Cast steel housing
- Internal silencing down to 80 dB(A)
- Alloy safety swivel hooks with safety catch
- Load chain of European manufacture to EN818-7
- Automatic, adjustable load limiter
- Trolley to suit various flange profiles
- Anti-tilt & anti-drop plates
- High efficiency motor gearbox
- Heavy duty sealed wheel bearings
- Wheel profile to suit parallel or tapered flanges

AVAILABLE OPTIONS

- Marine specification
- Special paint systems
- Collision bumpers
- ATEX specification ZONE 1 & 2
- Chain collectors (PVC, galvanised or stainless steel)
- Articulated trolley
- Low headroom units
- Rack & pinion drive
- Travel limits
- Air service units
- Festoon systems
- Radio control remote
- Optional travel speeds
- Beam brake

Image for illustration purposes only

HOIST MODEL	TCR-12000/4-AT10S
WLL	12000 kg
CHAIN FALLS	4
LIFTING SPEED FULL LOAD	0.6 m/min
LIFTING SPEED WITHOUT LOAD	1.4 m/min
AIR CONSUMPTION (L/SEC)	33
WORKING PRESSURE	6 bar
AIR CONNECTION	3/4" BSP
MINIMUM HOSE DIA.	3/4"
WEIGHT 3M HOL & TROLLEY	310 kg
ADDITIONAL METRE HOL	10.8 kg
TROLLEY MODEL	AT10S
G.A. DRAWING	1503-21
FLANGE RANGE 1	110-180
RANGE 2	180-240
RANGE 3	240-300
STANDARD TROLLEY TEMP RANGE	-10 to +50°C
OPTIONAL TROLLEY TEMP RANGE	-20 to +70°C
TRAVEL SPEED (M/MIN)	8
WHEEL MATERIAL	Steel
ATEX WHEEL MATERIAL	Bronze
MINIMUM BEND RADIUS (M)	3.0
NUMBER OF WHEELS	4
DRIVEN WHEELS	2
MAX AIR CONSUMPTION	40 l/sec
HOSE ID TROLLEY	3/4"

AT_S = STANDARD AT_ATX = ATEX

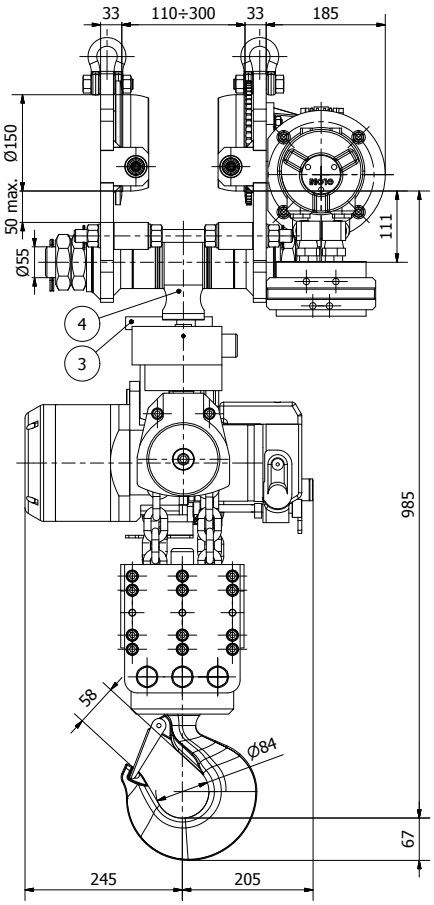

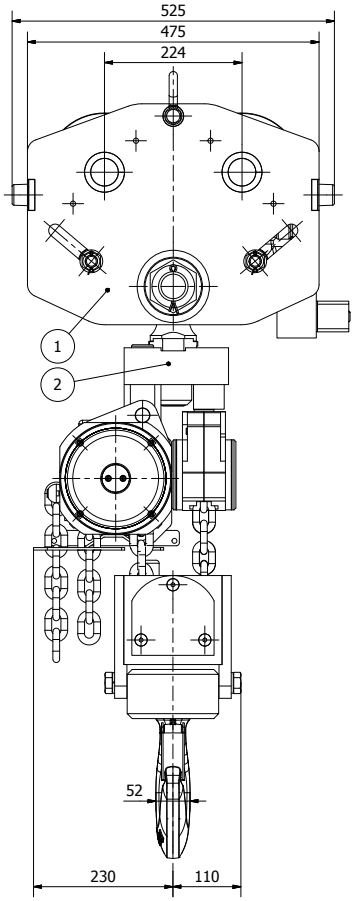

All measurements are in mm
Information subject to change without notice

TCR-12000/4-AT10S

PNEUMATIC CHAIN HOIST & TROLLEY

J. BARNSLEY Cranes Limited

STANDARD FEATURES

- Toku rotary vane motor
- Robust epicycle gearbox
- Failsafe automatic internal disc brake
- Choice of pendant controls or control stations
- Upper & lower limit switches
- Cast steel housing
- Internal silencing down to 80 dB(A)
- Alloy safety swivel hooks with safety catch
- Load chain of European manufacture to EN818-7
- Automatic, adjustable load limiter
- Trolley to suit various flange profiles
- Anti-tilt & anti-drop plates
- High efficiency motor gearbox
- Heavy duty sealed wheel bearings
- Wheel profile to suit parallel or tapered flanges

AVAILABLE OPTIONS

- Marine specification
- Special paint systems
- Collision bumpers
- ATEX specification ZONE 1 & 2
- Chain collectors (PVC, galvanised or stainless steel)
- Articulated trolley
- Low headroom units
- Rack & pinion drive
- Travel limits
- Air service units
- Festoon systems
- Radio control remote
- Optional travel speeds
- Beam brake

Image for illustration purposes only

HOIST MODEL	TCR-15000/5-AT15S
WLL	15000 kg
CHAIN FALLS	5
LIFTING SPEED FULL LOAD	0.5 m/min
LIFTING SPEED WITHOUT LOAD	1.1 m/min
AIR CONSUMPTION (L/SEC)	33
WORKING PRESSURE	6 bar
AIR CONNECTION	3/4" BSP
MINIMUM HOSE DIA.	3/4"
WEIGHT 3M HOL & TROLLEY	360 kg
ADDITIONAL METRE HOL	13.5 kg
TROLLEY MODEL	AT15S
G.A. DRAWING	1504-23
FLANGE RANGE 1	110-180
RANGE 2	180-240
RANGE 3	240-300
STANDARD TROLLEY TEMP RANGE	-10 to +50°C
OPTIONAL TROLLEY TEMP RANGE	-20 to +70°C
TRAVEL SPEED (M/MIN)	6
WHEEL MATERIAL	Steel
ATEX WHEEL MATERIAL	Bronze
MINIMUM BEND RADIUS (M)	3.0
NUMBER OF WHEELS	4
DRIVEN WHEELS	2
MAX AIR CONSUMPTION	40 l/sec
HOSE ID TROLLEY	1"

AT_S = STANDARD AT_ATX = ATEX

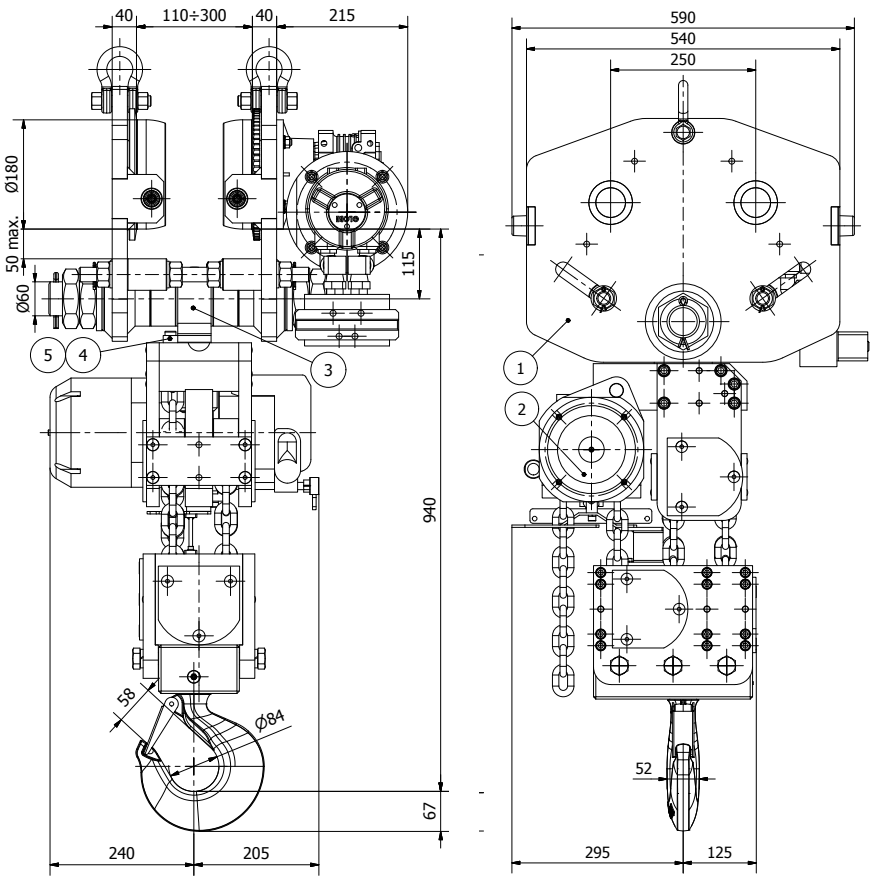

All measurements are in mm
Information subject to change without notice

TCR-15000/5-AT15S

PNEUMATIC CHAIN HOIST & TROLLEY

J. BARNSLEY Cranes Limited

STANDARD FEATURES

- Toku rotary vane motor
- Robust epicycle gearbox
- Failsafe automatic internal disc brake
- Choice of pendant controls or control stations
- Upper & lower limit switches
- Cast steel housing
- Internal silencing down to 80 dB(A)
- Alloy safety swivel hooks with safety catch
- Load chain of European manufacture to EN818-7
- Automatic, adjustable load limiter
- Trolley to suit various flange profiles
- Anti-tilt & anti-drop plates
- High efficiency motor gearbox
- Heavy duty sealed wheel bearings
- Wheel profile to suit parallel or tapered flanges

AVAILABLE OPTIONS

- Marine specification
- Special paint systems
- Collision bumpers
- ATEX specification ZONE 1 & 2
- Chain collectors (PVC, galvanised or stainless steel)
- Articulated trolley
- Low headroom units
- Rack & pinion drive
- Travel limits
- Air service units
- Festoon systems
- Radio control remote
- Optional travel speeds
- Beam brake

Image for illustration purposes only

HOIST MODEL	TCS-980-AT2S
WLL	980 kg
CHAIN FALLS	2
LIFTING SPEED FULL LOAD	8.5 m/min
LIFTING SPEED WITHOUT LOAD	16.0 m/min
AIR CONSUMPTION (L/SEC)	28
WORKING PRESSURE	6 bar
AIR CONNECTION	1/2" BSP
MINIMUM HOSE DIA.	1/2"
WEIGHT 3M HOL & TROLLEY	45 kg
ADDITIONAL METRE HOL	1.6 kg
TROLLEY MODEL	AT2S
G.A. DRAWING	1500-24
FLANGE RANGE 1	55-140
FLANGE RANGE 2	140-220
FLANGE RANGE 3	220-300
STANDARD TROLLEY TEMP RANGE	-10 to +50°C
OPTIONAL TROLLEY TEMP RANGE	-20 to +70°C
STANDARD TRAVEL SPEED	9 m/min
ATEX TRAVEL SPEED	6 m/min
OPTIONAL TRAVEL SPEED	14 m/min
WHEEL MATERIAL	Steel
ATEX WHEEL MATERIAL	Bronze
MINIMUM BEND RADIUS (M)	1.5
NUMBER OF WHEELS	4
DRIVEN WHEELS	2
MAX AIR CONSUMPTION	25 l/sec
HOSE ID TROLLEY	1/2"

AT_S = STANDARD AT_ATX = ATEX

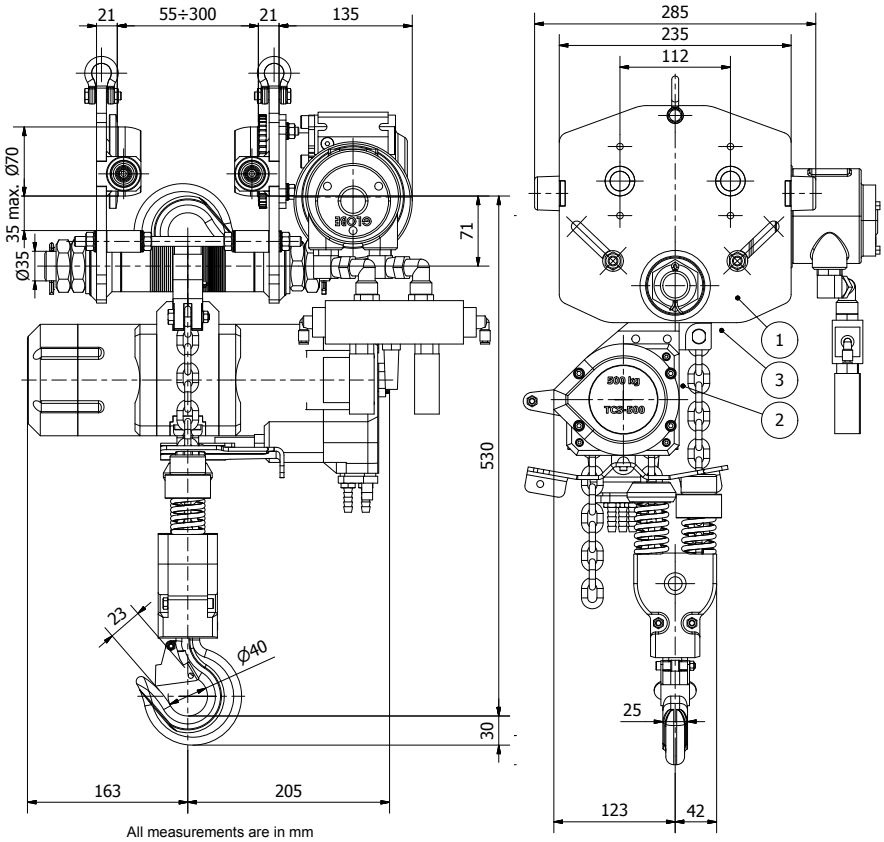

All measurements are in mm
Information subject to change without notice

TCS-980-AT2S

PNEUMATIC CHAIN HOIST & TROLLEY

J. BARNSLEY Cranes Limited

STANDARD FEATURES

- Toku rotary vane motor
- Robust epicycle gearbox
- Failsafe automatic internal disc brake
- Choice of pendant controls or control stations
- Upper & lower limit switches
- Cast steel housing
- Internal silencing down to 80 dB(A)
- Alloy safety swivel hooks with safety catch
- Load chain of European manufacture to EN818-7
- Automatic, adjustable load limiter
- Trolley to suit various flange profiles
- Anti-tilt & anti-drop plates
- High efficiency motor gearbox
- Heavy duty sealed wheel bearings
- Wheel profile to suit parallel or tapered flanges

AVAILABLE OPTIONS

- Marine specification
- Special paint systems
- Collision bumpers
- ATEX specification ZONE 1 & 2
- Chain collectors (PVC, galvanised or stainless steel)
- Articulated trolley
- Low headroom units
- Rack & pinion drive
- Travel limits
- Air service units
- Festoon systems
- Radio control remote
- Optional travel speeds
- Beam brake

Image for illustration purposes only

HOIST MODEL	TNC-10TW-AT10S
WLL	10000 kg
CHAIN FALLS	2
LIFTING SPEED FULL LOAD	1.5 m/min
LIFTING SPEED WITHOUT LOAD	2.5 m/min
AIR CONSUMPTION (L/SEC)	90
WORKING PRESSURE	6 bar
AIR CONNECTION	1" BSP
MINIMUM HOSE DIA.	1"
WEIGHT 3M HOL & TROLLEY	350 kg
ADDITIONAL METRE HOL	11.4 kg
TROLLEY MODEL	AT10S
G.A. DRAWING	1503-00
FLANGE RANGE 1	110-180
RANGE 2	180-240
RANGE 3	240-300
STANDARD TROLLEY TEMP RANGE	-10 to +50°C
OPTIONAL TROLLEY TEMP RANGE	-20 to +70°C
TRAVEL SPEED (M/MIN)	8
WHEEL MATERIAL	Steel
ATEX WHEEL MATERIAL	Bronze
MINIMUM BEND RADIUS (M)	2.5
NUMBER OF WHEELS	4
DRIVEN WHEELS	2
MAX AIR CONSUMPTION	40 l/sec
HOSE ID TROLLEY	1"

AT_S = STANDARD AT_ATX = ATEX

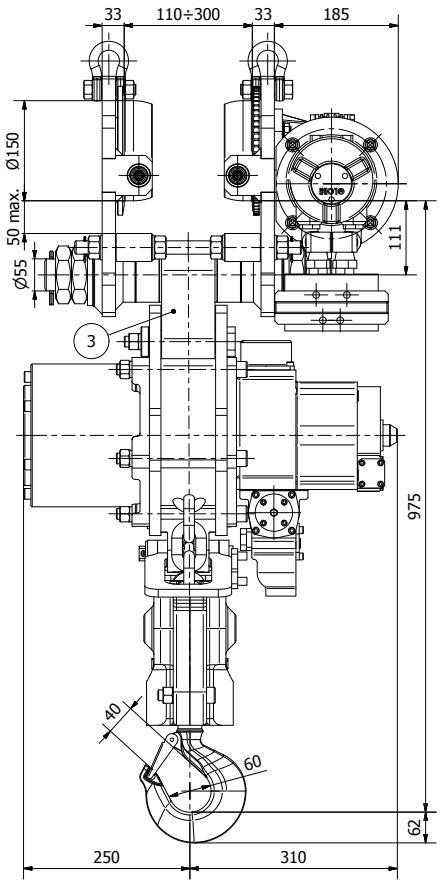

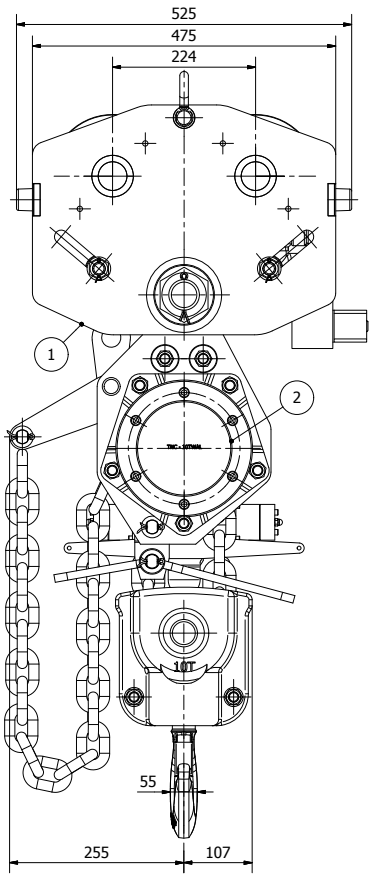

All measurements are in mm
Information subject to change without notice

TNC-10TW-AT10S

PNEUMATIC CHAIN HOIST & TROLLEY

J. BARNSLEY Cranes Limited

STANDARD FEATURES

- Toku rotary vane motor
- Robust epicycle gearbox
- Failsafe automatic internal disc brake
- Choice of pendant controls or control stations
- Upper & lower limit switches
- Cast steel housing
- Internal silencing down to 80 dB(A)
- Alloy safety swivel hooks with safety catch
- Load chain of European manufacture to EN818-7
- Automatic, adjustable load limiter
- Trolley to suit various flange profiles
- Anti-tilt & anti-drop plates
- High efficiency motor gearbox
- Heavy duty sealed wheel bearings
- Wheel profile to suit parallel or tapered flanges

AVAILABLE OPTIONS

- Marine specification
- Special paint systems
- Collision bumpers
- ATEX specification ZONE 1 & 2
- Chain collectors (PVC, galvanised or stainless steel)
- Articulated trolley
- Low headroom units
- Rack & pinion drive
- Travel limits
- Air service units
- Festoon systems
- Radio control remote
- Optional travel speeds
- Beam brake

Image for illustration purposes only

HOIST MODEL	TNC-15TW/3-AT15S
WLL	15000 kg
CHAIN FALLS	3
LIFTING SPEED FULL LOAD	1.0 m/min
LIFTING SPEED WITHOUT LOAD	1.6 m/min
AIR CONSUMPTION (L/SEC)	90
WORKING PRESSURE	6 bar
AIR CONNECTION	1" BSP
MINIMUM HOSE DIA.	1"
WEIGHT 3M HOL & TROLLEY	470 kg
ADDITIONAL METRE HOL	17.1 kg
TROLLEY MODEL	AT15S
G.A. DRAWING	1504-00
FLANGE RANGE 1	110-180
RANGE 2	180-240
RANGE 3	240-300
STANDARD TROLLEY TEMP RANGE	-10 to +50°C
OPTIONAL TROLLEY TEMP RANGE	-20 to +70°C
TRAVEL SPEED (M/MIN)	6
WHEEL MATERIAL	Steel
ATEX WHEEL MATERIAL	Bronze
MINIMUM BEND RADIUS (M)	3.0
NUMBER OF WHEELS	4
DRIVEN WHEELS	2
MAX AIR CONSUMPTION	40 l/sec
HOSE ID TROLLEY	1"

AT_S = STANDARD AT_ATX = ATEX

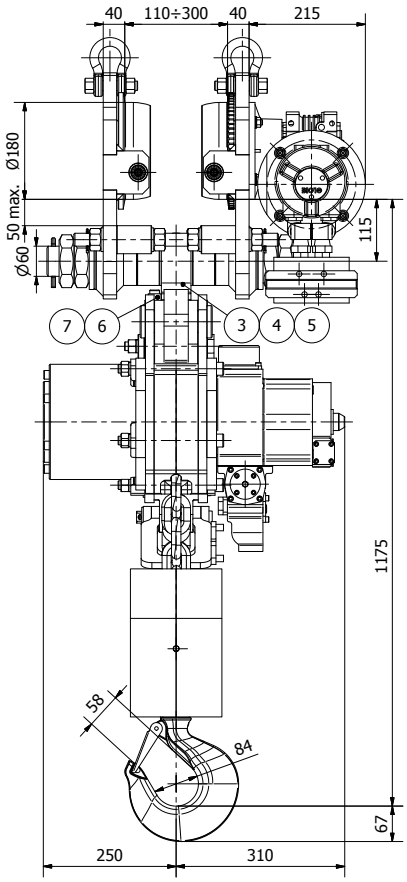

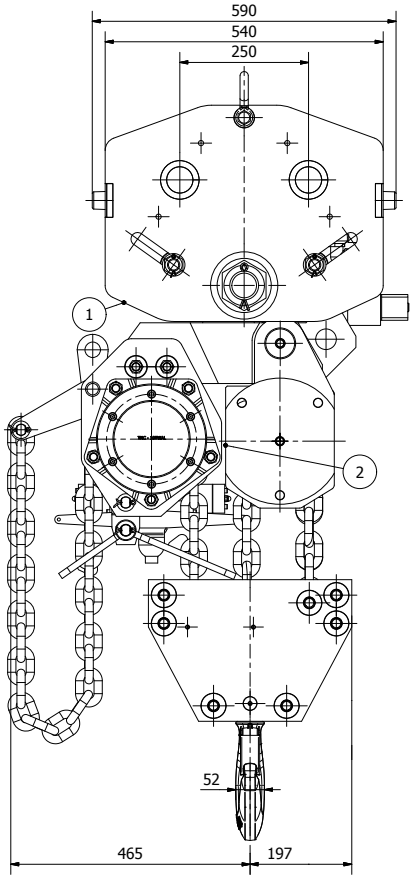

All measurements are in mm
Information subject to change without notice

TNC-15TW/3-AT15S

PNEUMATIC CHAIN HOIST & TROLLEY

J. BARNSLEY Cranes Limited

STANDARD FEATURES

- Toku rotary vane motor
- Robust epicycle gearbox
- Failsafe automatic internal disc brake
- Choice of pendant controls or control stations
- Upper & lower limit switches
- Cast steel housing
- Internal silencing down to 80 dB(A)
- Alloy safety swivel hooks with safety catch
- Load chain of European manufacture to EN818-7
- Automatic, adjustable load limiter
- Trolley to suit various flange profiles
- Anti-tilt & anti-drop plates
- High efficiency motor gearbox
- Heavy duty sealed wheel bearings
- Wheel profile to suit parallel or tapered flanges

AVAILABLE OPTIONS

- Marine specification
- Special paint systems
- Collision bumpers
- ATEX specification ZONE 1 & 2
- Chain collectors (PVC, galvanised or stainless steel)
- Articulated trolley
- Low headroom units
- Rack & pinion drive
- Travel limits
- Air service units
- Festoon systems
- Radio control remote
- Optional travel speeds
- Beam brake

Image for illustration purposes only

HOIST MODEL	TNC-20TW/4-AT25S
WLL	20000 kg
CHAIN FALLS	4
LIFTING SPEED FULL LOAD	0.85 m/min
LIFTING SPEED WITHOUT LOAD	1.25 m/min
AIR CONSUMPTION (L/SEC)	90
WORKING PRESSURE	6 bar
AIR CONNECTION	1" BSP
MINIMUM HOSE DIA.	1"
WEIGHT 3M HOL & TROLLEY	670 kg
ADDITIONAL METRE HOL	22.8 kg
TROLLEY MODEL	AT25S
G.A. DRAWING	1505-24
FLANGE RANGE 1	130-200
RANGE 2	200-260
RANGE 3	260-320
STANDARD TROLLEY TEMP RANGE	-10 to +50°C
OPTIONAL TROLLEY TEMP RANGE	-20 to +70°C
TRAVEL SPEED (M/MIN)	4
WHEEL MATERIAL	Steel
ATEX WHEEL MATERIAL	Bronze
MINIMUM BEND RADIUS (M)	3.0
NUMBER OF WHEELS	4
DRIVEN WHEELS	2
MAX AIR CONSUMPTION	40 l/sec
HOSE ID TROLLEY	1"

AT_S = STANDARD AT_ATX = ATEX

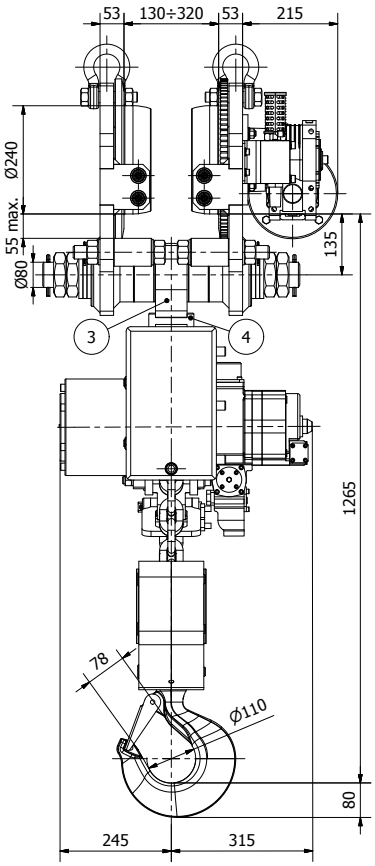

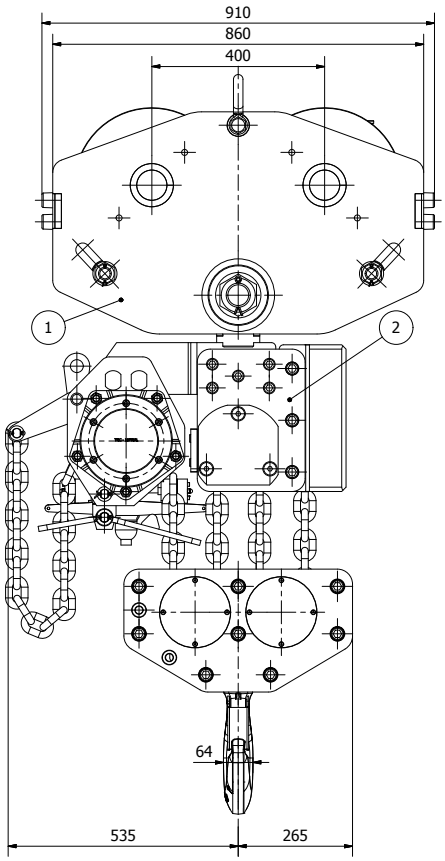

All measurements are in mm
Information subject to change without notice

TNC-20TW/4-AT25S

PNEUMATIC CHAIN HOIST & TROLLEY

J. BARNSLEY Cranes Limited

STANDARD FEATURES

- Toku rotary vane motor
- Robust epicycle gearbox
- Failsafe automatic internal disc brake
- Choice of pendant controls or control stations
- Upper & lower limit switches
- Cast steel housing
- Internal silencing down to 80 dB(A)
- Alloy safety swivel hooks with safety catch
- Load chain of European manufacture to EN818-7
- Automatic, adjustable load limiter
- Trolley to suit various flange profiles
- Anti-tilt & anti-drop plates
- High efficiency motor gearbox
- Heavy duty sealed wheel bearings
- Wheel profile to suit parallel or tapered flanges

AVAILABLE OPTIONS

- Marine specification
- Special paint systems
- Collision bumpers
- ATEX specification ZONE 1 & 2
- Chain collectors (PVC, galvanised or stainless steel)
- Articulated trolley
- Low headroom units
- Rack & pinion drive
- Travel limits
- Air service units
- Festoon systems
- Radio control remote
- Optional travel speeds
- Beam brake

Image for illustration purposes only

HOIST MODEL	TNC-25TW-AT25-2S
WLL	25000 kg
CHAIN FALLS	2
LIFTING SPEED FULL LOAD	0.6 m/min
LIFTING SPEED WITHOUT LOAD	1.0 m/min
AIR CONSUMPTION (L/SEC)	90
WORKING PRESSURE	6 bar
AIR CONNECTION	1" BSP
MINIMUM HOSE DIA.	1"
WEIGHT 3M HOL & TROLLEY	910 kg
ADDITIONAL METRE HOL	21.8 kg
TROLLEY MODEL	AT25-2S
G.A. DRAWING	1524-00
FLANGE RANGE 1	200-260
RANGE 2	260-320
STANDARD TROLLEY TEMP RANGE	-10 to +50°C
OPTIONAL TROLLEY TEMP RANGE	-20 to +70°C
TRAVEL SPEED (M/MIN)	6
WHEEL MATERIAL	Steel
ATEX WHEEL MATERIAL	Bronze
MINIMUM BEND RADIUS (M)	Straight only
NUMBER OF WHEELS	8
DRIVEN WHEELS	4
MAX AIR CONSUMPTION	80 l/sec
HOSE ID TROLLEY	1"

AT_S = STANDARD AT_ATX = ATEX

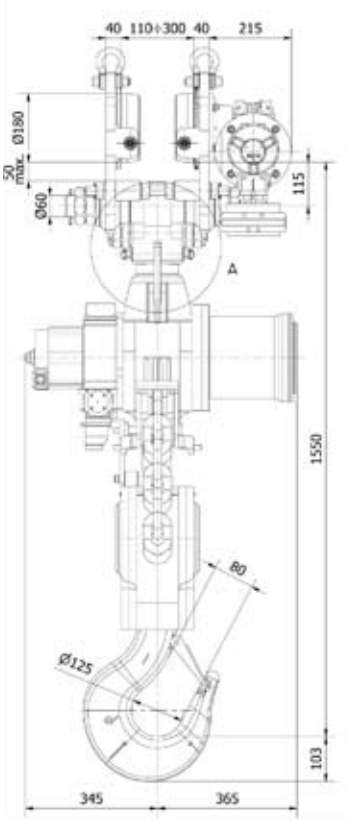

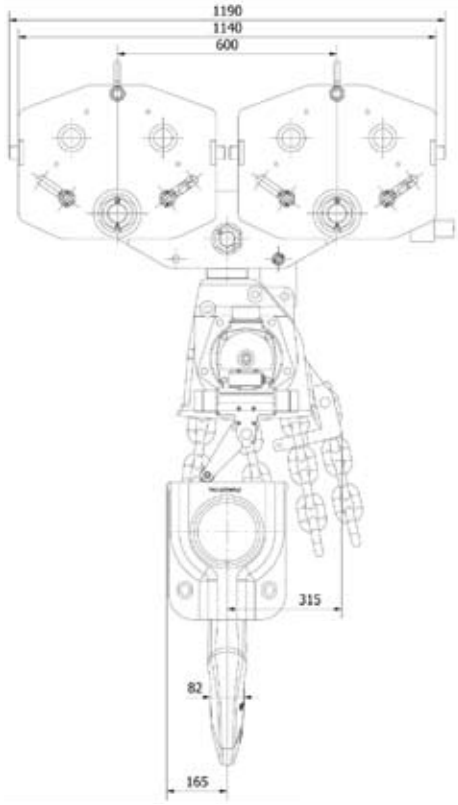

All measurements are in mm
Information subject to change without notice

TNC-25TW-AT25-2S

PNEUMATIC CHAIN HOIST & TROLLEY

J. BARNSLEY Cranes Limited

STANDARD FEATURES

- Toku rotary vane motor
- Robust epicycle gearbox
- Failsafe automatic internal disc brake
- Choice of pendant controls or control stations
- Upper & lower limit switches
- Cast steel housing
- Internal silencing down to 80 dB(A)
- Alloy safety swivel hooks with safety catch
- Load chain of European manufacture to EN818-7
- Automatic, adjustable load limiter
- Trolley to suit various flange profiles
- Anti-tilt & anti-drop plates
- High efficiency motor gearbox
- Heavy duty sealed wheel bearings
- Wheel profile to suit parallel or tapered flanges

AVAILABLE OPTIONS

- Marine specification
- Special paint systems
- Collision bumpers
- ATEX specification ZONE 1 & 2
- Chain collectors (PVC, galvanised or stainless steel)
- Articulated trolley
- Low headroom units
- Rack & pinion drive
- Travel limits
- Air service units
- Festoon systems
- Radio control remote
- Optional travel speeds
- Beam brake

Image for illustration purposes only

HOIST MODEL	TNC-25TW-AT25S
WLL	25000 kg
CHAIN FALLS	2
LIFTING SPEED FULL LOAD	0.6 m/min
LIFTING SPEED WITHOUT LOAD	1.0 m/min
AIR CONSUMPTION (L/SEC)	90
WORKING PRESSURE	6 bar
AIR CONNECTION	1" BSP
MINIMUM HOSE DIA.	1"
WEIGHT 3M HOL & TROLLEY	880 kg
ADDITIONAL METRE HOL	21.8 kg
TROLLEY MODEL	AT25S
G.A. DRAWING	1505-00
FLANGE RANGE 1	130-200
RANGE 2	200-260
RANGE 3	260-320
STANDARD TROLLEY TEMP RANGE	-10 to +50°C
OPTIONAL TROLLEY TEMP RANGE	-20 to +70°C
TRAVEL SPEED (M/MIN)	4
WHEEL MATERIAL	Steel
ATEX WHEEL MATERIAL	Bronze
MINIMUM BEND RADIUS (M)	3.0
NUMBER OF WHEELS	4
DRIVEN WHEELS	2
MAX AIR CONSUMPTION	40 l/sec
HOSE ID TROLLEY	1"

AT_S = STANDARD AT_ATX = ATEX

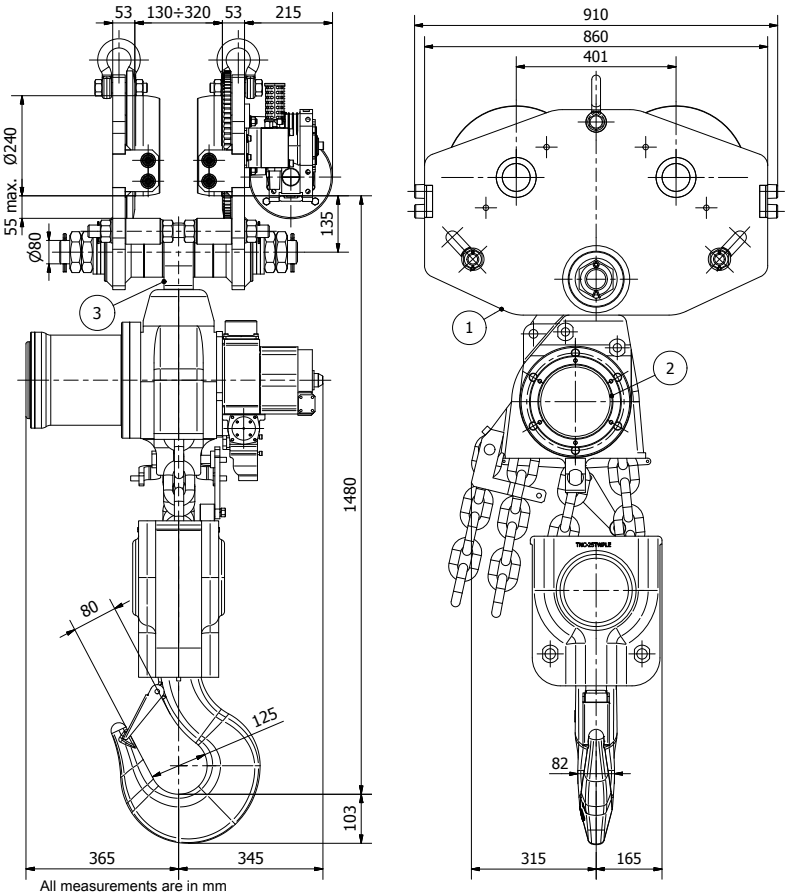

All measurements are in mm
Information subject to change without notice

TNC-25TW-AT25S

PNEUMATIC CHAIN HOIST & TROLLEY

J. BARNSLEY Cranes Limited

STANDARD FEATURES

- Toku rotary vane motor
- Robust epicycle gearbox
- Failsafe automatic internal disc brake
- Choice of pendant controls or control stations
- Upper & lower limit switches
- Cast steel housing
- Internal silencing down to 80 dB(A)
- Alloy safety swivel hooks with safety catch
- Load chain of European manufacture to EN818-7
- Automatic, adjustable load limiter
- Trolley to suit various flange profiles
- Anti-tilt & anti-drop plates
- High efficiency motor gearbox
- Heavy duty sealed wheel bearings
- Wheel profile to suit parallel or tapered flanges

AVAILABLE OPTIONS

- Marine specification
- Special paint systems
- Collision bumpers
- ATEX specification ZONE 1 & 2
- Chain collectors (PVC, galvanised or stainless steel)
- Articulated trolley
- Low headroom units
- Rack & pinion drive
- Travel limits
- Air service units
- Festoon systems
- Radio control remote
- Optional travel speeds
- Beam brake

Image for illustration purposes only

HOIST MODEL	TNC-37.5TW-AT37.5-2S
WLL	37500 kg
CHAIN FALLS	3
LIFTING SPEED FULL LOAD	0.4 m/min
LIFTING SPEED WITHOUT LOAD	0.6 m/min
AIR CONSUMPTION (L/SEC)	90
WORKING PRESSURE	6 bar
AIR CONNECTION	1" BSP
MINIMUM HOSE DIA.	1"
WEIGHT 3M HOL & TROLLEY	1380 kg
ADDITIONAL METRE HOL	32.7 kg
TROLLEY MODEL	AT37.5-2S
G.A. DRAWING	1507-00
FLANGE RANGE 1	205-260
FLANGE RANGE 2	260-320
STANDARD TROLLEY TEMP RANGE	-10 to +50°C
OPTIONAL TROLLEY TEMP RANGE	-20 to +70°C
TRAVEL SPEED (M/MIN)	4
WHEEL MATERIAL	Steel
ATEX WHEEL MATERIAL	Bronze
MINIMUM BEND RADIUS (M)	Straight only
NUMBER OF WHEELS	8
DRIVEN WHEELS	4
MAX AIR CONSUMPTION	80 l/sec
HOSE ID TROLLEY	1.25"

AT_S = STANDARD AT_ATX = ATEX

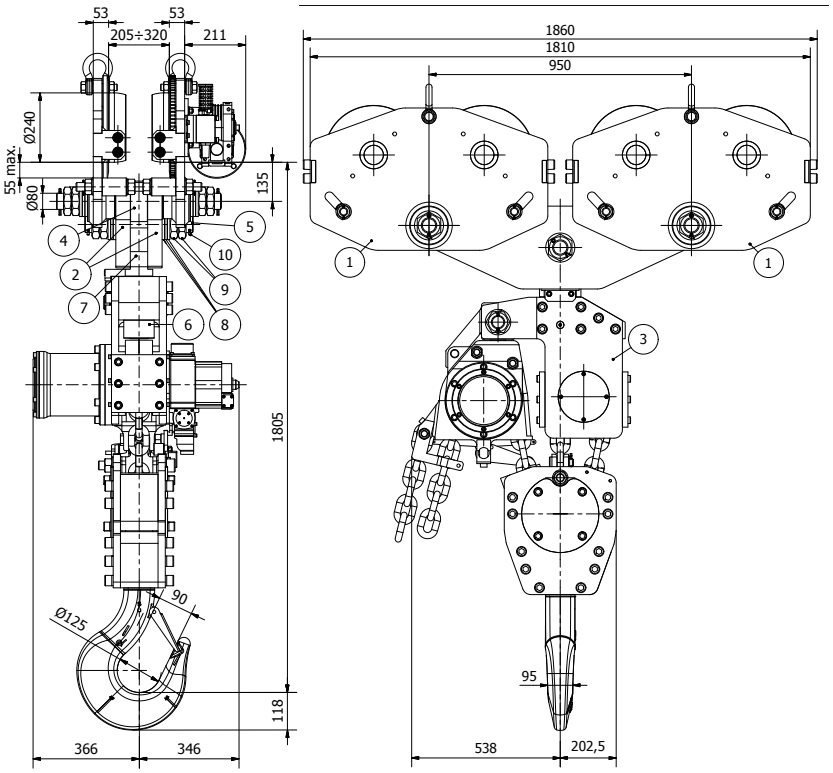

All measurements are in mm
Information subject to change without notice

TNC-37.5TW-AT37.5-2S

PNEUMATIC CHAIN HOIST & TROLLEY

J. BARNSLEY Cranes Limited

STANDARD FEATURES

- Toku rotary vane motor
- Robust epicycle gearbox
- Failsafe automatic internal disc brake
- Choice of pendant controls or control stations
- Upper & lower limit switches
- Cast steel housing
- Internal silencing down to 80 dB(A)
- Alloy safety swivel hooks with safety catch
- Load chain of European manufacture to EN818-7
- Automatic, adjustable load limiter
- Trolley to suit various flange profiles
- Anti-tilt & anti-drop plates
- High efficiency motor gearbox
- Heavy duty sealed wheel bearings
- Wheel profile to suit parallel or tapered flanges

AVAILABLE OPTIONS

- Marine specification
- Special paint systems
- Collision bumpers
- ATEX specification ZONE 1 & 2
- Chain collectors (PVC, galvanised or stainless steel)
- Articulated trolley
- Low headroom units
- Rack & pinion drive
- Travel limits
- Air service units
- Festoon systems
- Radio control remote
- Optional travel speeds
- Beam brake

Image for illustration purposes only

HOIST MODEL	TNC-50TW/4-AT50-2S
WLL	50000 kg
CHAIN FALLS	4
LIFTING SPEED FULL LOAD	0.3 m/min
LIFTING SPEED WITHOUT LOAD	0.45 m/min
AIR CONSUMPTION (L/SEC)	90
WORKING PRESSURE	6 bar
AIR CONNECTION	1" BSP
MINIMUM HOSE DIA.	1"
WEIGHT 3M HOL & TROLLEY	1900 kg
ADDITIONAL METRE HOL	43.6 kg
TROLLEY MODEL	AT50-2S
G.A. DRAWING	1506-00
FLANGE RANGE 1	205-260
FLANGE RANGE 2	260-320
STANDARD TROLLEY TEMP RANGE	-10 to +50°C
OPTIONAL TROLLEY TEMP RANGE	-20 to +70°C
TRAVEL SPEED (M/MIN)	4
WHEEL MATERIAL	Steel
ATEX WHEEL MATERIAL	Bronze
MINIMUM BEND RADIUS (M)	Straight only
NUMBER OF WHEELS	8
DRIVEN WHEELS	4
MAX AIR CONSUMPTION	80 l/sec
HOSE ID TROLLEY	1.25"

AT_S = STANDARD AT_ATX = ATEX

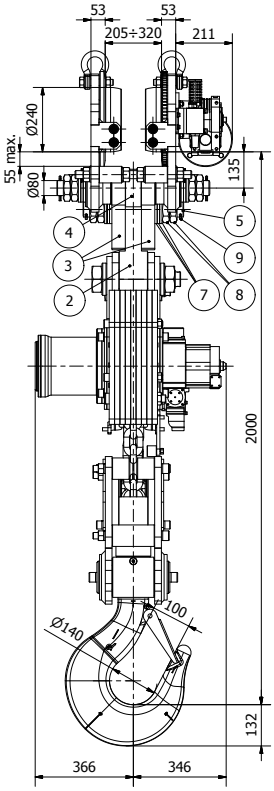

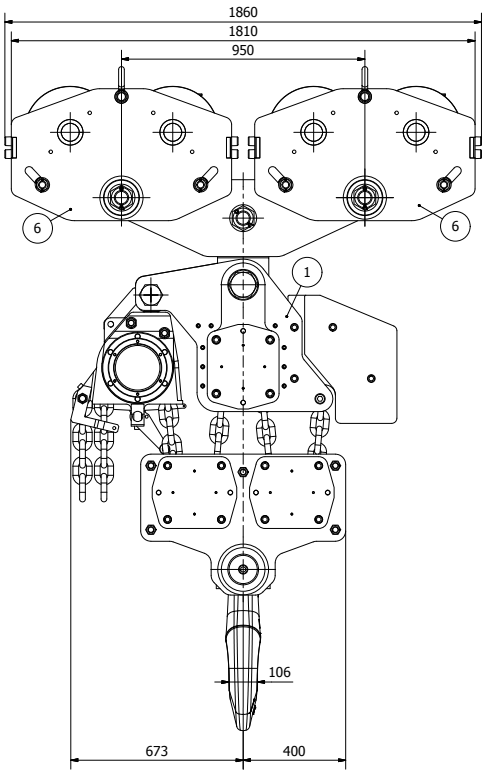

All measurements are in mm
Information subject to change without notice

TNC-50TW/4-AT50-2S